ANNALS of Faculty Engineering Hunedoara – International Journal of Engineering
Tome XVIII [2020] | Fascicule 4 [November]

[1.]D.B. KAMDI, [2.]Navneet KUMAR

THERMAL BEHAVIOUR OF AN ANNULAR FIN IN CONTEXT OF FRACTIONAL THERMOELASTICITY WITH CONVECTION BOUNDARY CONDITIONS

[1.]Department of Mathematics, RMG College, Chandrapur, INDIA,
[2.]Department of Mathematics, RTM Nagpur University, Nagpur, INDIA

Abstract: This present paper, concerned with the study of two dimensional thermoelastic problem of an annular fin with the fractional order derivative of order $0<\alpha\leq 2$ occupying the space $D=\{(x,y,z)\in R^3 : a\leq (x^2+y^2)^{1/2}\leq b,\ 0\leq z\leq l\}$. The zero initial condition is assumed, further $F_1(z,t)$ and $F_2(z,t)$ is the temperatures which are kept at the inner and outer circular edges of fin also $f(r,t)$ and $g(r,t)$ is the temperatures prescribed at the lower and upper surfaces. Convection boundary conditions are assumed on the surfaces of annular fin. The analytical solution for temperature distribution and thermal stresses are obtained by applying finite Marchi-Zgrablich and Laplace transform technique. The results are obtained in the form of infinite series in terms of Bessel's function. Numerical results of temperature change and stress distribution are illustrated graphically are shown in figures by considering material properties of cooper material with the help of Mathematica software.

Keywords: Caputo fractional derivative, temperature distribution, thermal Stresses, annular fin, Integral Transform, Mittag-Leffler Function

1. INTRODUCTION

Wu [8] investigated the transient thermal stresses in an annular fin by considering its base subjected to a heat flux of a decayed exponential function of time. Yu [9] determined the stress distribution in a perfectly elastic isotropic annular fin where Taylor transformation method was used to solve the nonlinear temperature field equation. Deshmukh [10] investigated the transient thermal stresses in an annular fin by applying integral transform technique, where temperature transfer condition was prescribed on the surface of annular fin and results obtained at any point of the fin. Kulkarni [12] determined thermal stresses in a thick annular disc under the steady temperature field. Ranjan [2019] investigated the thermoelastic behavior of a functionally graded material (FGM) annular fin by considering material properties to vary radially, whereas heat transfer coefficient and internal heat generation are considered to be functions of temperature. Yıldırım [2019] studied thermal stress distributions in an annular fin with rectangular profile which was made of functionally graded material (FGM), with material properties were assumed to be graded along the fin radius follows a power-law function.

During processing by the classical Fourier law ignores different physical situations microscopic level which is quite essential this encourages for the formulation of nonclassical theories. A nonclassical theory implies to replace the parabolic heat conduction equation and the Fourier law by more general equations. Povstenko [13-21] successfully developed various thermoelastic problems based on fractional order theory. Recently, Khobragade [24] calculated thermal deflection and stresses by application of fractional order theory of thermoelasticity by doing mathematical modeling of a circular disk due to partially distributed heat supply. Khobragade [25] determined the temperature distribution, displacement, stress function and thermal deflection on outer curved surface of a solid circular cylinder thermoelastic deformation in context of fractional order theory of thermoelasticity. Kumar [26] investigated the magneto-thermodynamic response by application of fractional thermoelasticity for orthotropic Solid Cylinder by using integral transform technique.

ANNALS of Faculty Engineering Hunedoara – International Journal of Engineering
ISSN 1584 - 2665 (printed version); ISSN 2601 - 2332 (online); ISSN-L 1584 - 2665

Kumar [27] studied thermoelastic behaviour of hollow cylinder by the application of fractional order theory and subjected to convective boundary condition on upper and lower plane surface. The present paper attempts to generalize the problem considered by Wu and Deshmukh to obtain the exact solution of temperature distribution and thermal stresses in an annular fin in context of fractional thermoelasticity with convection boundary conditions. Finite Marchi- Zgrablich transform and Laplace transform techniques is used to obtained the results. The results are obtained in the form of infinite series in terms of Bessel's function. The proposed system of equations in this paper can be useful to design of useful structures or machines in science and engineering applications with fractional order parameter and convection boundaries.

2. FORMULATION OF THE PROBLEM

Here we assume a thin annular fin with thickness l whose internal radius a and external radius b with convection type boundary conditions on the curved surfaces of cylinder. The inner surface $r=a$ of fin is subjected to $F_1(z,t)$ and the outer surface $r=b$ is subjected to $F_2(z,t)$, also the lower surface subjected to $f(r,t)$ and upper surface at $g(t,t)$. The above said problem in mathematically constructed for nonlocal Caputo type time fractional heat conduction equation of order α and temperature distribution and thermal stresses are required to be analyzed.

The Caputo type fractional derivative given by [11]

$$\frac{d^\alpha f(t)}{dt^\alpha}=\begin{cases}\dfrac{1}{\Gamma(n-\alpha)}\displaystyle\int_0^t (t-\tau)^{n-\alpha-1}\frac{d^n f(\tau)}{d\tau^n}d\tau, & n-1<\alpha<n,\\ \dfrac{d^n f(\tau)}{dt^n}, & \alpha=n\end{cases} \tag{1}$$

with the following Laplace transform rule

$$L\left\{\frac{d^\alpha f(t)}{dt^\alpha}\right\}=s^\alpha L\{\bar{f}(s)\}-\sum_{k=0}^{n-1} f^{(k)}(0^+)s^{\alpha-1-k},\quad n-1<\alpha<n. \tag{2}$$

in which s is the transform parameter.

3. STATEMENT OF PROBLEM

Consider an isotropic annular fin with convection boundaries occupying the space $D=\{(x,y,z)\in R^3 : a\le (x^2+y^2)^{1/2}\le b,\ 0\le z\le l\}$.

The material of the fin is isotropic, homogenous and all properties are assumed to be constant. We assume that the fin is of a small thickness and its boundary surfaces remain traction free (as shown in Figure 1).

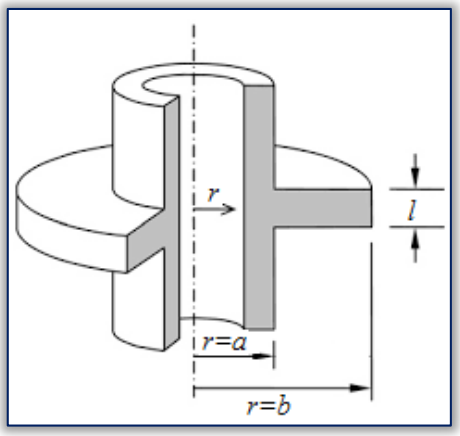

Figure 1. Cross-sectional view of an isotropic circular annular fin

The governing equations and boundary conditions for the stress field [3-4] consist of:

a non-zero stress strain-displacement equation [1]

$$\varepsilon_r=\frac{\partial u}{\partial r},\ \varepsilon_\phi=\frac{u}{r}, \tag{3}$$

a single equilibrium equation

$$\frac{d\sigma_r}{dr}+\frac{\sigma_r-\sigma_\phi}{r}=0, \tag{4}$$

two equations of stress-strain-temperature relations [10]

$$\sigma_r=\frac{E}{1-\upsilon^2}\left[\varepsilon_r+\upsilon\varepsilon_\phi-(1+\upsilon)\alpha T\right] \tag{5}$$

$$\sigma_\phi=\frac{E}{1-\upsilon^2}\left[\varepsilon_\phi+\upsilon\varepsilon_r+(1+\upsilon)\alpha T\right] \tag{6}$$

and, two boundary conditions

$$\sigma_r=0 \text{ at } r=a \tag{7}$$

$$\sigma_r=0 \text{ at } r=b \tag{8}$$

Combining equations (1)-(4), integrating twice with respect to r, and applying the boundary conditions (5, 6), one obtains the stress-displacement relations as

$$\sigma_r = -\frac{\alpha E}{r^2}\int_a^r (T-T_\infty)\eta\, d\eta + \frac{\alpha E}{b^2-a^2}\left(1-\frac{a^2}{r^2}\right)\int_a^b (T-T_\infty)\eta\, d\eta \tag{9}$$

$$\sigma_\phi = -\alpha E(T-T_\infty) + \frac{\alpha E}{r^2}\int_a^r (T-T_\infty)\eta\, d\eta + \frac{\alpha E}{b^2-a^2}\left(1-\frac{a^2}{r^2}\right)\int_a^b (T-T_\infty)\eta\, d\eta \tag{10}$$

Substituting these expressions, for the radial & tangential stresses into the stress equilibrium equation (4), leads to the following governing equation for the thermoelastic equilibrium of the circular annular fin in qualitative agreement with equations found earlier [8 and 10] as

$$k\left(\frac{\partial^2 T}{\partial r^2} + \frac{1}{r}\frac{\partial T}{\partial r} + \frac{\partial^2 T}{\partial z^2}\right) - \frac{2h}{l}(T-T_\infty) = \rho c \frac{\partial^\alpha T}{\partial t^\alpha} \quad a \le r \le b, 0 \le z \le l \quad , t > 0 \tag{11}$$

with the boundary conditions,

$$\left[T(r,z,t) - k_1 D_{RL}^{1-\alpha}\frac{\partial T(r,z,t)}{\partial r}\right]_{r=a} = F_1(z,t), \quad \text{for all } 0 \le z \le l \text{ and } t > 0 \tag{12}$$

$$\left[T(r,z,t) + k_2 D_{RL}^{1-\alpha}\frac{\partial T(r,z,t)}{\partial r}\right]_{r=R} = F_2(z,t), \quad \text{for all } 0 \le z \le l \text{ and } t > 0 \tag{13}$$

where k_1 and k_2 are the radiation constants on the two annular fin surfaces

$$\left[T(r,z,t) + c D_{RL}^{1-\alpha}\frac{\partial T(r,z,t)}{\partial z}\right]_{z=0} = f(r,t), \quad \text{for all } a \le r \le b \text{ and } t > 0 \tag{14}$$

$$\left[T(r,z,t) - c D_{RL}^{1-\alpha}\frac{\partial T(r,z,t)}{\partial z}\right]_{z=L} = g(r,t), \quad \text{for all } a \le r \le b \text{ and } t > 0 \tag{15}$$

And zero initial conditions are,

$$T(r,z,t) = 0, \qquad \text{at } t = 0, \qquad 0 \le \alpha \le 2 \tag{16}$$

$$\frac{\partial T(r,z,t)}{\partial t} = 0, \qquad \text{at } t = 0, \qquad 1 \le \alpha \le 2 \tag{17}$$

Introducing the following dimensionless parameters as defined in the nomenclature (Appendix A):

$$\theta = \frac{k(T-T_\infty)}{(q_b a)}, \quad \xi = \frac{r}{a}, \quad \zeta = \frac{z}{a}, \quad L = \frac{l}{a}, \quad \tau = \frac{(kt)}{(\rho c a^2)}, \quad R = \frac{b}{a}, \quad N^2 = \frac{2ha^2}{kl}$$

The equation (11) can be written in the dimensionless form as:

$$\frac{\partial^2\theta}{\partial\xi^2} + \frac{1}{\xi}\frac{\partial\theta}{\partial\xi} + \frac{\partial^2\theta}{\partial\zeta^2} - N^2\theta = \frac{\partial^\alpha\theta}{\partial\tau^\alpha}, \; 1 \le \xi \le R, \; 0 \le \zeta \le L, \; \tau > 0 \tag{18}$$

The dimensionless radial and tangential stresses S_r and S_ϕ in terms of the dimensionless displacement function are,

$$S_r = -\left(\frac{1}{\xi^2}\right)\int_1^\xi \theta\xi\, d\xi + \left(\frac{1}{\xi^2}\frac{\xi^2-1}{R^2-1}\right)\int_1^R \theta\xi\, d\xi \tag{19}$$

$$S_\phi = -\theta + \left(\frac{1}{\xi^2}\right)\int_1^\xi \theta\xi\, d\xi + \left(\frac{1}{\xi^2}\frac{\xi^2+1}{R^2-1}\right)\int_1^R \theta\xi\, d\xi \tag{20}$$

In dimensionless form of boundary conditions are redefined as

$$\left[\theta(\xi,\zeta,\tau) - k_1 D_{RL}^{1-\alpha}\frac{\partial\theta(\xi,\zeta,\tau)}{\partial\xi}\right]_{\xi=1} = F_1(\zeta,\tau), \quad \text{for all } 0 \le \zeta \le L \text{ and } \tau > 0 \tag{21}$$

$$\left[\theta(\xi,\zeta,\tau) + k_2 D_{RL}^{1-\alpha}\frac{\partial\theta(\xi,\zeta,\tau)}{\partial\xi}\right]_{\xi=R} = F_2(\zeta,\tau), \quad \text{for all } 0 \le \zeta \le L \text{ and } \tau > 0 \tag{22}$$

where k_1 and k_2 are the radiation constants on the two annular fin surfaces

$$\left[\theta(\xi,\zeta,\tau) + c D_{RL}^{1-\alpha}\frac{\partial\theta(\xi,\zeta,\tau)}{\partial\zeta}\right]_{\zeta=0} = f(\xi,\tau), \quad \text{for all } 1 \le \xi \le R \text{ and } \tau > 0 \tag{23}$$

$$\left[\theta(\xi,\zeta,\tau)-c\,D_{RL}^{1-\alpha}\frac{\partial\theta(\xi,\zeta,\tau)}{\partial\zeta}\right]_{\zeta=L}=g(\xi,\tau)\text{, for all } 1\le\xi\le R \text{ and } \tau>0 \tag{24}$$

and zero initial conditions are,

$$\theta(\xi,\zeta,\tau)=0, \qquad \text{at } \tau=0, \qquad 0\le\alpha\le 2 \tag{25}$$

$$\frac{\partial\theta(\xi,\zeta,\tau)}{\partial\tau}=0, \qquad \text{at } \tau=0, \qquad 1\le\alpha\le 2 \tag{26}$$

where $F_l(\zeta,\tau)$ and $F_R(\zeta,\tau)$ are known constants and here it is set to be zero, as this assumption, commonly made in the literatures [4] and [10], leads to considerable mathematical simplification and the function $f(\xi,\tau)$ and $g(\xi,\tau)$ are assumed to be known.

The equations (18) to (26) constitute the mathematical formulation of the problem under consideration.

4. SOLUTION OF THE PROBLEM

Firstly we define the finite Marchi-Zgrablich integral transform and their inverse transform over the variable r for $f(r)$ in the range $a\le r\le b$ as [4]

$$\bar{f}_p(m)=\int_a^b r\,f(r)\,S_p(\alpha,\beta,\mu_m r)\,dr \tag{27}$$

where α_1, α_2, β_1 and β_2 are the constants involved in the boundary conditions $\alpha_1 f(r)+\alpha_2 f'(r)\big|_{r=a}=0$ and $\beta_1 f(r)+\beta_2 f'(r)\big|_{r=b}=0$ for the differential equation $f''(r)+(1/r)f'(r)-(p^2/r^2)f(r)=0$, $\bar{f}_p(n)$ is the transform of $f(r)$ with respect to kernel $S_p(\alpha,\beta,\mu_m r)$ and weight function r

The inversion of equation (27) is given by

$$f(r)=\sum_{m=1}^{\infty}\frac{\bar{f}_p(m)\,S_p(\alpha,\beta,\mu_m r)}{\int_a^b\left[r\,S_p(\alpha,\beta,\mu_m r)\right]^2 dr} \tag{28}$$

where kernel function $S_p(\alpha,\beta,\mu_m r)$ can be defined as

$$S_p(\alpha,\beta,\mu_m r)=J_p(\mu_m r)[Y_p(\alpha,\mu_m a)+Y_p(\beta,\mu_m b)]-Y_p(\mu_m r)[J_p(\alpha,\mu_m a)+J_p(\beta,\mu_m b)] \tag{29}$$

and $J_p(\mu r)$ and $Y_p(\mu r)$ are Bessel function of first and second kind respectively.

Applying finite Marchi-Zgrablich defined in equation (27) and Laplace transform defined in equation (2) and their inversions to equation (18) and making use of the transformed boundary and initial conditions (21)-(26), one obtains temperature distribution function expressed as follows,

$$\begin{aligned}\theta(\xi,\zeta,\tau)=&\left(\frac{2\pi(1-c)}{L^2}\right)\sum_{n=1}^{\infty}\left(\frac{1}{c_n}\right)\sum_{m=0}^{\infty}m(-1)^{m+1}\left[\sin\left(\frac{m\pi\zeta}{L}\right)-\left(\frac{m\pi}{L}\right)\cos\left(\frac{m\pi\zeta}{L}\right)\right]\\&\times S_0(k_1,k_2,\mu_n r)\frac{\bar{g}(n)}{1-c^2\mu_n^{\,2}}\left\{E_\alpha\left[-\left(\frac{m^2\pi^2}{L^2}+\mu_n^2+N^2\right)t^\alpha\right]\right\}\\&-\left(\frac{2\pi(1-c)}{L^2}\right)\sum_{n=1}^{\infty}\left(\frac{1}{c_n}\right)\sum_{m=0}^{\infty}m(-1)^{m+1}\left[\sin m\pi\left(\frac{\zeta-L}{L}\right)-\left(\frac{m\pi}{L}\right)\cos m\pi\left(\frac{\zeta-L}{L}\right)\right]\\&\times S_0(k_1,k_2,\mu_n r)\frac{\bar{f}(n)}{1-c^2\mu_n^{\,2}}\left\{E_\alpha\left[-\left(\frac{m^2\pi^2}{L^2}+\mu_n^2+N^2\right)t^\alpha\right]\right\}\end{aligned} \tag{30}$$

where $L^{-1}\left\{\dfrac{1}{s^\alpha+\left(\dfrac{m^2\pi^2}{L^2}+\mu_n^2+N^2\right)}\right\}=\left\{E_\alpha\left[-\left(\dfrac{m^2\pi^2}{L^2}+\mu_n^2+N^2\right)t^\alpha\right]\right\}$

Here $E_\alpha[.]$ represents the Mittag–Leffler function.

and

$$C_n = \frac{b^2}{2}\left\{S_p^2(k_1,k_2,\mu_n b) - J_{p-1}(k_1,k_2,\mu_n b).J_{p+1}(k_1,k_2,\mu_n b)\right\}$$
$$-\frac{a^2}{2}\left\{S_p^2(k_1,k_2,\mu_n a) - J_{p-1}(k_1,k_2,\mu_n a).J_{p+1}(k_1,k_2,\mu_n a)\right\}$$

where $S_p(k_1,k_2,\mu_n\xi) = J_p(\mu_n\xi)\{Y_p(k_1,\mu_n a)+Y_p(k_2,\mu_n b)\} - Y_p(\mu_n\xi)\{Y_p(k_1,\mu_n a)+Y_p(k_2,\mu_n b)\}$ being $J_p(k_i,\mu\xi) = J_p(\mu\xi)+k_i\,\mu\,J_p'(\mu\xi)$ and $Y_p(k_i,\mu\xi) = Y_p(\mu\xi)+k_i\,\mu\,Y_p'(\mu\xi)$

Here $J_p(\mu x)$ and $Y_p(\mu x)$ $=\frac{1}{2}\pi\,\mathrm{cosec}(p\pi)[J_{-p}(\mu x)-e^{-ip\pi}J_p(\mu x)]$ are Bessel's functions of first and second kind respectively of order p. μ_n are the positive roots of equation $J_0(k_1,\mu a).Y_0(k_2,\mu b) - J_0(k_2,\mu b).Y_0(k_1,\mu a) = 0$.

Substituting the temperature distribution function in the given thermal stresses equations (19) and (20), one obtains

$$S_r = \left(\frac{1}{\xi^2}\frac{2\pi(1-c)}{L^2}\right)\sum_{n=1}^{\infty}\left(\frac{1}{c_n}\right)\sum_{m=1}^{\infty} m(-1)^{m+1}\left[\left(\frac{m\pi}{L}\right)\cos\left(\frac{m\pi\zeta}{L}\right)-\sin\left(\frac{m\pi\zeta}{L}\right)\right]$$
$$\times\int_1^{\xi}\xi S_0(k_1,k_2,\mu_n\xi)d\xi\times\frac{\bar{g}(n)}{(1-c^2\mu_n{}^2)}\left\{E_\alpha\left[-\left(\frac{m^2\pi^2}{L^2}+\mu_n^2+N^2\right)t^\alpha\right]\right\}$$
$$+\left(\frac{1}{\xi^2}\frac{2\pi(1-c)}{L^2}\right)\sum_{n=1}^{\infty}\left(\frac{1}{c_n}\right)\sum_{m=0}^{\infty} m(-1)^{m+1}\left[\sin m\pi\left(\frac{\zeta-L}{L}\right)-\left(\frac{m\pi}{L}\right)\cos m\pi\left(\frac{\zeta-L}{L}\right)\right]$$
$$\times\int_1^{\xi}\xi S_0(k_1,k_2,\mu_n\xi)d\xi\times\frac{\bar{f}(n)}{(1-c^2\mu_n{}^2)}\left\{E_\alpha\left[-\left(\frac{m^2\pi^2}{L^2}+\mu_n^2+N^2\right)t^\alpha\right]\right\}$$
$$+\left(\frac{1}{\xi^2}\frac{(\xi^2-1)}{(R^2-1)}\frac{2\pi(1-c)}{L^2}\right)\sum_{n=1}^{\infty}\left(\frac{1}{c_n}\right)\sum_{m=1}^{\infty} m(-1)^{m+1}\left[\sin\left(\frac{m\pi\zeta}{L}\right)-\left(\frac{m\pi}{L}\right)\cos\left(\frac{m\pi\zeta}{L}\right)\right]$$
$$\times\int_1^{R}\xi S_0(k_1,k_2,\mu_n\xi)d\xi\times\frac{\bar{g}(n)}{(1-c^2\mu_n{}^2)}\left\{E_\alpha\left[-\left(\frac{m^2\pi^2}{L^2}+\mu_n^2+N^2\right)t^\alpha\right]\right\}$$
$$+\left(\frac{2\pi(1-c)}{\xi^2L^2}\frac{(\xi^2-1)}{(R^2-1)}\right)\sum_{m=1}^{\infty}\left(\frac{1}{c_n}\right)m(-1)^{m+1}\left[\left(\frac{m\pi}{L}\right)\cos\left(\frac{m\pi(\zeta-L)}{L}\right)-\sin\left(\frac{m\pi(\zeta-L)}{L}\right)\right]$$
$$\times\int_1^{R}\xi S_0(k_1,k_2,\mu_n\xi)d\xi\times\frac{\bar{f}(n)}{(1-c^2\mu_n{}^2)}\left\{E_\alpha\left[-\left(\frac{m^2\pi^2}{L^2}+\mu_n^2+N^2\right)t^\alpha\right]\right\} \qquad (31)$$
$$S_\phi = \left(\frac{2\pi(1-c)}{L^2}\right)\sum_{n=1}^{\infty}\left(\frac{1}{c_n}\right)\sum_{m=1}^{\infty} m(-1)^{m+1}\left[\left(\frac{m\pi}{L}\right)\cos\left(\frac{m\pi\zeta}{L}\right)-\sin\left(\frac{m\pi\zeta}{L}\right)\right]$$
$$\times S_0(k_1,k_2,\mu_n\xi)\frac{\bar{g}(n)}{(1-c^2\mu_n{}^2)}\left\{E_\alpha\left[-\left(\frac{m^2\pi^2}{L^2}+\mu_n^2+N^2\right)t^\alpha\right]\right\}$$
$$+\left(\frac{2\pi(1-c)}{L^2}\right)\sum_{m=1}^{\infty}\left(\frac{1}{c_n}\right)m(-1)^{m+1}\left[\sin\left(\frac{m\pi(\zeta-L)}{L}\right)-\left(\frac{m\pi}{L}\right)\cos\left(\frac{m\pi(\zeta-L)}{L}\right)\right]$$
$$\times S_0(k_1,k_2,\mu_n\xi)\times\frac{\bar{f}(n)}{(1-c^2\mu_n{}^2)}\left\{E_\alpha\left[-\left(\frac{m^2\pi^2}{L^2}+\mu_n^2+N^2\right)t^\alpha\right]\right\}$$
$$+\left(\frac{2\pi}{\xi^2}\frac{(1-c)}{L^2}\right)\sum_{n=1}^{\infty}\frac{1}{c_n}\sum_{m=1}^{\infty} m(-1)^{m+1}\left[\sin\left(\frac{m\pi\zeta}{L}\right)-\left(\frac{m\pi}{L}\right)\cos\left(\frac{m\pi\zeta}{L}\right)\right]$$
$$\times\int_1^{\xi}\xi S_0(k_1,k_2,\mu_n\xi)d\xi\times\frac{\bar{g}(n)}{(1-c^2\mu_n{}^2)}\left\{E_\alpha\left[-\left(\frac{m^2\pi^2}{L^2}+\mu_n^2+N^2\right)t^\alpha\right]\right\}dt'$$

$$+\left(\frac{2\pi(1-c)}{\xi^2 L^2}\right)\sum_{m=1}^{\infty}\frac{1}{c_n}m(-1)^{m+1}\left[\left(\frac{m\pi}{L}\right)\cos\left(\frac{m\pi(\zeta-L)}{L}\right)-\sin\left(\frac{m\pi(\zeta-L)}{L}\right)\right]$$

$$\times\frac{\bar{f}(n)}{(1-c^2\mu_n{}^2)}\left\{E_\alpha\left[-\left(\frac{m^2\pi^2}{L^2}+\mu_n^2+N^2\right)t^\alpha\right]\right\}dt'\times\int_1^{\xi}\xi S_0(k_1,k_2,\mu_n\xi)d\xi$$

$$+\left(\frac{1}{\xi^2}\frac{(\xi^2+1)}{(R^2-1)}\frac{2\pi(1-c)}{L^2}\right)\sum_{n=1}^{\infty}\frac{1}{c_n}\sum_{m=1}^{\infty}m(-1)^{m+1}\left[\sin\left(\frac{m\pi\zeta}{L}\right)-\left(\frac{m\pi}{L}\right)\cos\left(\frac{m\pi\zeta}{L}\right)\right]$$

$$\times\int_1^{R}\xi S_0(k_1,k_2,\mu_n\xi)d\xi\times\frac{\bar{g}(n)}{(1-c^2\mu_n{}^2)}\left\{E_\alpha\left[-\left(\frac{m^2\pi^2}{L^2}+\mu_n^2+N^2\right)t^\alpha\right]\right\}$$

$$+\left(\frac{1}{\xi^2}\frac{(\xi^2+1)}{(R^2-1)}\frac{2\pi(1-c)}{L^2}\right)\sum_{m=1}^{\infty}\frac{1}{c_n}m(-1)^{m+1}\left[\left(\frac{m\pi}{L}\right)\cos\left(\frac{m\pi(\zeta-L)}{L}\right)-\sin\left(\frac{m\pi(\zeta-L)}{L}\right)\right]$$

$$\times\int_1^{R}\xi S_0(k_1,k_2,\mu_n\xi)d\xi\times\frac{\bar{f}(n)}{(1-c^2\mu_n{}^2)}\left\{E_\alpha\left[-\left(\frac{m^2\pi^2}{L^2}+\mu_n^2+N^2\right)t^\alpha\right]\right\} \tag{32}$$

5. CONVERGENCE OF THE SERIES SOLUTION

In order for the solution to be meaningful, the series expressed in equation (30) should converge for all D: $1\le\xi\le R, 0\le\zeta\le L$ and should further investigate the conditions which has to be imposed on the functions $F_1(\zeta,\tau)$, $F_R(\zeta,\tau)$, $A(\xi,\tau)$, $B(\xi,\tau)$, and $f(\xi,\tau)$, so that the convergence of the series expansion for $\theta(\xi,\zeta,\tau)$ is valid. The expression for temperature (30) for $\theta(\xi,\zeta,\tau)$ in dimensionless parameters may be expressed as

$$\theta(\xi,\zeta,\tau)=\left(\frac{2\pi(1-c)}{L^2}\right)\sum_{n=1}^{\infty}\frac{1}{c_n}\sum_{m=0}^{M_0}m(-1)^{m+1}\left[\sin\left(\frac{m\pi\zeta}{L}\right)-\left(\frac{m\pi}{L}\right)\cos\left(\frac{m\pi\zeta}{L}\right)\right]$$

$$\times S_0(k_1,k_2,\mu_n\xi)\frac{\bar{g}(n)}{(1-c^2\mu_n{}^2)}\left\{E_\alpha\left[-\left(\frac{m^2\pi^2}{L^2}+\mu_n^2+N^2\right)t^\alpha\right]\right\}$$

$$+\left(\frac{2\pi(1-c)}{L^2}\right)\sum_{n=1}^{\infty}\frac{1}{c_n}\sum_{m=0}^{M_0}m(-1)^{m+1}\left[\frac{m\pi}{L}\cos m\pi\left(\frac{\zeta-L}{L}\right)-\sin m\pi\left(\frac{\zeta-L}{L}\right)\right]$$

$$\times S_0(k_1,k_2,\mu_n\xi)\frac{\bar{f}(n)}{(1-c^2\mu_n{}^2)}\left\{E_\alpha\left[-\left(\frac{m^2\pi^2}{L^2}+\mu_n^2+N^2\right)t^\alpha\right]\right\}$$

$$=\sum_{n=1}^{\infty}(Q_nC_{1n})S_nJ_0(\mu_n\xi)-\sum_{n=1}^{\infty}(Q_nC_{2n})S_nY_0(\mu_n\xi) \tag{33}$$

where

$$C_{1n}=Y_0(k_1,\mu_na)+Y_0(k_2,\mu_nb)\ ,\ C_{2n}=J_0(k_1,\mu_na)+J_0(k_2,\mu_nb)\ ,\ Q_n=\frac{2a}{\eta C_n},$$

$$Y_0(k_i,\mu_n\xi)=Y_0(\mu\xi)+k_i\mu Y_0'(\mu\xi)\ ,\ J_0(k_i,\mu_n\xi)=J_0(\mu\xi)+k_i\mu J_0'(\mu\xi),$$

and

$$S_n=-\left(\frac{2\pi(1-c)}{L^2}\right)\sum_{m=0}^{M_0}m(-1)^{m+1}\left[\sin\left(\frac{m\pi\zeta}{L}\right)-\frac{m\pi}{L}\cos\left(\frac{m\pi\zeta}{L}\right)\right]$$

$$\times\frac{\bar{g}(n)}{(1-c^2\mu_n{}^2)}\left\{E_\alpha\left[-\left(\frac{m^2\pi^2}{L^2}+\mu_n^2+N^2\right)t^\alpha\right]\right\}$$

$$+\left(\frac{2\pi(1-c)}{L^2}\right)\sum_{m=0}^{M_0}m(-1)^{m+1}\left[\left(\frac{m\pi}{L}\right)\cos m\pi\left(\frac{\zeta-L}{L}\right)-\sin m\pi\left(\frac{\zeta-L}{L}\right)\right]$$

$$\times\frac{\bar{f}(n)}{(1-c^2\mu_n{}^2)}\left\{E_\alpha\left[-\left(\frac{m^2\pi^2}{L^2}+\mu_n^2+N^2\right)t^\alpha\right]\right\} \tag{34}$$

After taking in to account the asymptotic behaviour of $\mu_n, S_0(k_1, k_2, \mu_n\xi)$ and C_n given in [8], it is observed that the series expansion (34) for $\theta(\xi,\zeta,\tau)$ will be convergent, if

$$\left.\begin{array}{l}\dfrac{\bar{g}(n)}{(1-c^2\mu_n{}^2)}\times\left\{E_\alpha\left[-\left(\dfrac{m^2\pi^2}{L^2}+\mu_n^2+N^2\right)t^\alpha\right]\right\}\\ \dfrac{\bar{f}(n)}{(1-c^2\mu_n{}^2)}\times\left\{E_\alpha\left[-\left(\dfrac{m^2\pi^2}{L^2}+\mu_n^2+N^2\right)t^\alpha\right]\right\}\end{array}\right\}=0\left(\frac{1}{\mu_n{}^k}\right),\ k>0 \tag{35}$$

Here, $\bar{g}(n)$, $\bar{f}(n)$ in equation (35) can be chosen as one of the following functions or the combinations thereof with addition or multiplication or both, as the laws of combination: Constant, $\sin(\omega\tau)$, $\cos(\omega\tau)$, e^{-kt} or polynomials in ξ, S_n, $J_0(\mu_n x)$, $Y_0(\mu_n x)$, Q_nC_{1n}, Q_nC_{2n} are convergent and thus, $\theta(\xi,\zeta,\tau)$ is convergent to a limit $\{\theta(\xi,\zeta,\tau)\}_{\xi=R,\zeta=L}$. Here, we consider that the convergence of a series for $\xi=R$ implies to the convergence for all $\xi\le R$, and $\zeta=L$ implies to the convergence for all $\zeta\le L$.

6. SPECIAL CASE AND NUMERICAL RESULTS

Set $f(\xi)=e^{\xi}(1+c)$ and $g(\xi)=e^{\xi}e^{L}(1+c)$

c=1, R = 2, $k_1=0.25, k_2=0.25$ and L = 2, 1 = 1, $\eta=1$ in the equation (30) to obtain

$$\begin{aligned}\theta(\xi,\tau)=&\sum_{n=1}^{\infty}\frac{1}{c_n}\left\{\frac{2\pi k a^2}{\eta^2}\sum_{m=1}^{\infty}m(-1)^{m+1}\left[\left(\frac{m\pi a}{\eta}\right)\cos\left(\frac{m\pi a L}{\eta}\right)-\sin\left(\frac{m\pi a L}{\eta}\right)\right]\right.\\&\times e^{\xi}(1+c)\left\{E_\alpha\left[-\left(\frac{m^2\pi^2}{L^2}+\mu_n^2+N^2\right)t^\alpha\right]\right\}S_0(k_1,k_2,\mu_n\xi)r_0\ \ S_0(k_1,k_2,\mu_n r_0)\\&+\frac{2\pi k a^2}{\eta^2}\sum_{m=1}^{\infty}(2m-1)(-1)^{m+1/2}\left[\sin\left(\frac{(m-1/2)\pi a L}{\eta}\right)-\left(\frac{(m-1/2)\pi a}{\eta}\right)\cos\left(\frac{(m-1/2)\pi a L}{\eta}\right)\right]\\&\times e^{\xi}e^{L}(1+c)\left\{E_\alpha\left[-\left(\frac{m^2\pi^2}{L^2}+\mu_n^2+N^2\right)t^\alpha\right]\right\}S_0(k_1,k_2,\mu_n,\xi)\\&\times r_0\ \ S_0(k_1,k_2,\mu_n r_0)\end{aligned} \tag{28}$$

Dimensions:

≡ Inner radii of the fin $a=1\,m$

≡ Outer radii of the fin $b=2\,m$

≡ Thickness of fin $h=0.15\ m$

The cooper material was chosen for purpose of numerical calculation for an annular fin as:

≡ Thermal diffusivity $k=112.34\times10^{-6}\,m^2/s^{\alpha}$

≡ Density $\rho=8954\,kg/m^3$

≡ Specific heat $c_p=383\,J/(kg\,K)$

≡ Poisson ratio $\nu=0.35$

≡ Coefficient of linear thermal expansion $\alpha_t=16.5\times10^{-6}/K$

≡ Lame constant $\mu=56.67$ GPa

MATEMATICA software is used for numerical computations to find the solutions of the temperature distribution, radial stress distribution and tangential stress distribution along radial direction for different values of the fractional-order parameter α are computed numerically.

Figure 1 shows the variation of dimensionless temperature distributions along the radial direction for the different values of the fractional-order parameter $\alpha=0.25,\ \alpha=0.75,\ \alpha=1.5,\ \alpha=2$. Above plot indicates a uniform distribution pattern of temperature with respect to radius. Temperature increases radially from $\xi=1.1$ to $\xi=1.4$ and after then it decreases gradually towards outward radii. Also it is noted that at both the inner and outer radii i.e. at $\xi=1$ and $\xi=2$ temperature assumes a

nonzero value. Here the speed of propagation of the thermal signals is found directly proportional to the values of the fractional-order parameter α.

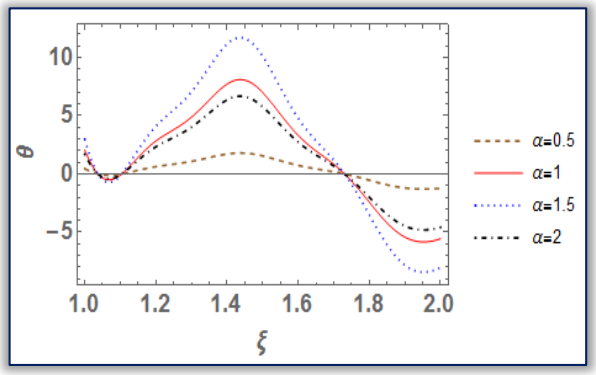

Figure 1. Dimensionless temperature distribution function

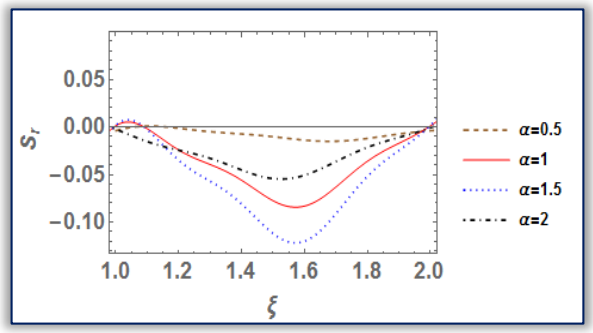

Figure 2. Dimensionless radial stresses distribution function

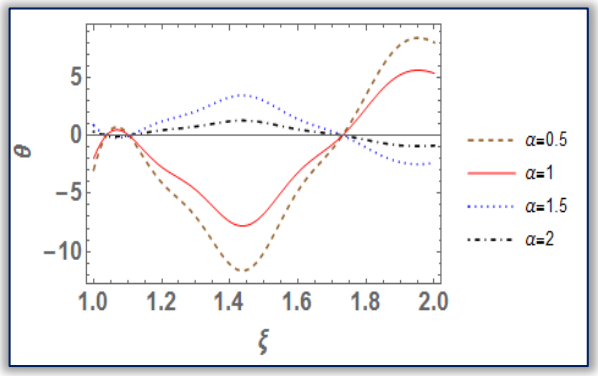

Figure 3. Dimensionless tangential stresses distribution function

Figure 2 shows the variation of dimensionless radial stress S_r in radial direction for different values of the fractional-order parameter $\alpha = 0.25,\ \alpha = 0.75,\ \alpha = 1.5,\ \alpha = 2$. It is seen that the stress distribution follows dome shaped behaviour. Throughout the cylinder the radial stress is found compressive. It is gradually decreasing in the region $1 \le \xi \le 1.6$ and increasing towards the outer radius. Further it is observed that the radial stress is zero at both the radial ends which agrees with the prescribed traction free boundary conditions. Also it is noted that radial stresses distribution is found to be less for the small value of fractional-order parameter α.

Figure 3 shows the variation of dimensionless tangential stresses distributions S_ϕ along the radial direction for the different values of the fractional-order parameter $\alpha = 0.25,\ \alpha = 0.75,\ \alpha = 1.5,\ \alpha = 2$. Also it is noted that at both the inner and outer radii i.e. at $r = 1$ and $r = 2$ tangential stresses assumes a nonzero value.

From the graphs, it is clear that the speed of wave propagation is affected by changing values of fractional-order parameter α. Hence, it may be an important factor for designing new materials applicable to real life situations.

7. CONCLUSION

In the present paper, we analyze the time fractional heat conduction equation under zero initial conditions for a thin annular fin. The corresponding temperature and thermal stresses is obtained using the finite Marchi-Zgrablich and Laplace transform technique. The results are obtained in terms of Bessel's function in the form of infinite series. The obtained series solution given here will be definitely convergent since the thickness of annular fin is assumed to be very small. Weak conductivity range for fractional order parameter is $0 < \alpha < 1$ and for strong conductivity range is $1 < \alpha < 2$, while $\alpha = 1$ refers to normal conductivity. Thus lagging response to physical stimulus is predicted in fractional thermoelastic theory. Any particular case of special interest can be derived by assigning suitable values to the parameters and functions in the series of expressions. The temperature and thermal stresses that are obtained by quasi static approach using fractional calculus which should be useful for researchers working in material sciences and can be applied to the design of useful structures or machines in engineering applications.

References

[1] Sokolnikoff, I. S., Mathematical Theory of Elasticity, 2nd ed, Mc Graw Hill, New York (1956).
[2] Carslaw, S.H. and Jaeger, J.C., Conduction of heat in solids, 2nd ed. Oxford University Press, New York, (1959).
[3] Boley, B.A. and Weiner, J.H., Theory of thermal stresses, Johan Wiley and Sons, New York, (1960).
[4] Marchi, E. and Zgrablich, J., Heat conduction in hollow cylinder with radiation, proceeding Edinburg Math. Soc. Vol. 14 (Series 11) Part. 2, pp. 159-164 (1964).
[5] Timoshenko, S.P. and Goodier, J.N., Theory of Elasticity, McGraw-Hill, New York (1970).

[6] Sneddon, I.N., The use of integral transforms, Mc Graw Hill, New York (1972).
[7] Crandall, S.H., Dahl, N.C. and Lardner, T.J., An introduction to the Mechanics of solids, McGraw-Hill, New York (1978).
[8] Shang-Sheng, Wu, Analysis on transient thermal stresses in an annular fin, Journal of Thermal stresses, Vol. 20, pp.591-615, (1997).
[9] Yu, L.T. and Chen, C.K., Application of Taylor transformation to the thermal stresses in isotropic annular fins, Vol. 21, Issue 8, pp. 781-809, (1998).
[10] Warade, R.W. and Deshmukh, K.C., Mathematical modeling on transient thermal stresses in an annular fin, Acta Ciencia Indica, Vol. XXIX M, No. 3, pp. 507-516, (2003).
[11] N. Noda, R. B. Hetnarski, Y. Tanigawa.: Thermal Stresses, 2nd Ed, Taylor and Francis, New York (2003).
[12] Kulkarni, V. and Deshmukh, K.C., Thermal Stresses in a Thick Annular Disc, Journal of Thermal stresses, Vol. 31, Issue 4, pp.331-342, (2008).
[13] Povstenko, Y.: Thermoelasticity which uses fractional heat conduction equation. Journal of Mathematical Sciences, Volume 162, Issue 2, pp. 296–305 (2009)
[14] Povstenko, Y.: Non-axisymmetric solutions to time-fractional diffusion-wave equation in an infinite cylinder. Fract. Calc. Appl. Anal. Volume 14, Issue 3, pp. 418–435 (2011)
[15] Povstenko, Y.Z.: Solutions to time-fractional diffusion-wave equation in cylindrical coordinates, Advances in Differential Equations, Article no. 930297, (2011)
[16] Povstenko, Y.Z.: Non-axisymmetric solutions to time-fractional heat conduction equation in a half-space in cylindrical coordinates. Math. Methods Phys.-Mech. Fields, Volume 54, Issue 1, pp. 212–219 (2011)
[17] Povstenko, Y.: Axisymmetric solutions to time fractional heat conduction equation in a half space under Robin boundary conditions. International Journal of Differential Equations, Article ID 154085, pp. 1-13 (2012)
[18] Povstenko, Y.: Fractional thermoelasticity. In: Hetnarski, R.B. (ed.) Encyclopedia of Thermal Stresses, vol. 4, pp. 1778–1787. Springer, New York (2014)
[19] Povstenko, Y.: Axisymmetric thermal stresses in a half-space in the framework of fractional thermoelasticity, Scientific Issues of Jan Długosz University in Częstochowa Mathematics, Math. 19, pp. 207–216 (2014)
[20] Povstenko, Y.: Axisymmetric solution to time-fractional heat conduction equation in an infinite cylinder under local heating and associated thermal stresses. International Journal of Mechanics, Volume 8, pp. 383–390 (2014)
[21] Povstenko, Y.: Fractional Thermoelasticity, New York: Springer, 2015.
[22] Yıldırım, A., Yarimpabuc, D. and Celebi, K., Thermal stress analysis of functionally, Journal of Thermal stresses, Vol. 42, Issue 4, pp.440-451, (2019).
[23] Ranjan, R., Mallick, A. and Jana, P., Thermoelastic study of a functionally graded annular fin with variable thermal parameters using semi exact solution, Journal of Thermal stresses, Vol. 42, Issue 10, pp.1272-1297, (2019).
[24] Khobragade N. L. and Kumar N.: Thermal Deflection and Stresses of a Circular Disk Due to Partially Distributed Heat Supply by Application of Fractional Order Theory, Journal of Computer and Mathematical Sciences, Vol.10(3),429-437 (2019).
[25] Khobragade N. L. and Kumar N.: Study of Thermoelastic Deformation of a Solid Circular Cylinder by Application of Fractional Order Theory, Journal of Computer and Mathematical Sciences, Vol.10(3),438-444 (2019).
[26] Khobragade N. L. and Lamba N. K.: Magneto-thermodynamic Stress Analysis of an Orthotropic Solid Cylinder by Fractional Order Theory Application, Research & Reviews: Journal of Physics, Volume 8, Issue 1, pp. 37-45 (2019).
[27] Khobragade N. L. and Lamba N. K.: Modeling of Thermoelastic Hollow Cylinder by the Application of Fractional Order Theory, Research & Reviews: Journal of Physics, Volume 8, Issue 1, pp. 46-57, (2019).

ANNALS of Faculty Engineering Hunedoara – International Journal of Engineering
ISSN 1584 - 2665 (printed version); ISSN 2601 - 2332 (online); ISSN-L 1584 - 2665