ANNALS of Faculty Engineering Hunedoara – International Journal of Engineering
Tome XX [2022] | Fascicule 3 [August]

[1.] Mihăiţă–Daniel CONSTANTINESCU, [1.]Mihaela POPESCU, [1.]Constantin Vlad SURU

IMPLEMENTATION OF CONSERVATIVE POWER THEORY IN THE CONTROL OF ACTIVE POWER FILTERS

[1.] Faculty for Electrical Engineering, University of Craiova, ROMANIA

Abstract: The Conservative Power Theory (CPT) is a time–domain theory applicable to any periodic signal in a single – or poly–phase system with or without a neutral conductor which allows the decomposition of the load distorted currents in components with physical meaning. In this paper, this theory is used to substantiate the control of a three–phase shunt active power filter. After the presentation of the CPT specific concepts and definitions, their application for the generation of the reference compensating current in order to achieve the total and partial compensation are taken into account. Based on the conceived Matlab–Simulink model of the entire active filtering system, the simulation results prove the proper operation of the system and good performance.

Keywords: Active power filter, Conservative Power Theory, Current decomposition, Void current

1. INTRODUCTION

As most of industrial, commercial and home loads have non–linear character, the harmonic distortion level in power grids has become a serious issue.

Negative aspects which could be determined by the high level of harmonics in the power grid are well known and there were introduced standards and recommendations in order to limit these harmonic distortions. Among these, the most cited in the literature is IEEE Std. 519 [1], [2]. Therefore, customers need to limit the harmonic current at the supply side by adopting the harmonics filtering solutions.

The use of shunt active power filters (SAPF) has gained momentum with the new standards imposed on equipment, in the context of the evolution of technology and the performance of power semiconductors, but also due to progress in DSP, numerical methods and control algorithms [3]–[7].

A SAPF is able to inject in the point of common coupling (PCC) with the nonlinear load a proper compensating current, so that different compensation objectives are achieved (such as harmonic compensation, reactive power compensation, load unbalance compensation) [8]. Although there are methods in the frequency domain for generating the prescribed compensation current, the methods in the time domain are most often used. The most common of these are: the p–q theory based method, the synchronous reference frame (SRF) and the id–iq method [7]–[12]. A less widely used method in the control of SAPF is based on the Conservative Power Theory (CPT). As will be shown, this allows simple calculation of the active current from the load current, so that the total compensation goal can be achieved without much calculation.

This paper is organized as follows. Section 2 introduces the main concepts of the CPT theory. Then, the implementation of the CPT in the control of the SAPF is approached by modeling in the Matlab–Simulink environment. The simulation results are presented in Section 4. Finally, some conclusions are drawn.

2. THE CONSERVATIVE POWER THEORY – BASIC DEFINITIONS

The Conservative Power Theory developed by Paolo Tenti refers to the fundamental physical quantities (voltages, currents, as well as their integrals and derivatives), through which the average and instantaneous powers are introduced, these being conservative in any electrical network [13]–[15]. There are few implementations of CPT in SAPF control, with good results [16]–[19].

Starting from a set of real variables x an y, continuous in time and periodic of period T, Tenti defined their internal product ($x \circ y$) and the norm $\|x\|$ of $x(t)$ as:

$$x \circ y = \frac{1}{T}\int_0^T x(t)y(t)dt\,; \tag{1}$$

$$\|x\| = \sqrt{x \circ x} = \sqrt{\frac{1}{T}\int_0^T x^2(t)dt} = X\,. \tag{2}$$

Using the angular frequency $\omega = 2\pi/T$, the derivative and integral operators are defined as follows:

$$\breve{x} = \frac{1}{\omega}\frac{dx}{dt}; \tag{3}$$

$$\hat{x} = \omega(x' - \bar{x}'), \tag{4}$$

where:

$$x'(t) = \int_0^t x(\tau)d\tau$$
$$\overline{x}'(t) = \frac{1}{T}\int_0^T x'(t)dt \tag{5}$$

An important feature of the CPT is the possibility of current decomposition into five components. In single–phase systems, these parts are named as active current, reactive current, scattered active current, scattered reactive current, and generated current. The scattered active current, scattered reactive current, and generated current can be grouped into one part named void current. In three–phase systems, the current has also terms associated with the balance and unbalance characteristics of an unbalanced load.

For a clear and straightforward implementation of the CPT, the current components are included in block diagrams in this paper.

Thus, according to the CPT, any current $i(t)$ can be divided into five parts, as follows:

$$i(t) = i_a(t) + i_r(t) + i_{sa}(t) + i_g(t) \tag{6}$$

where: i_a – active current; i_r – reactive current; i_{sa} – scattered active current; i_{sr} – scattered reactive current; i_g – generated current.

The sum of the last three terms can be replaced with a single component (void current $i_v(t)$), as follows:

$$i_v(t) = i_{sa}(t) + i_{sr}(t) + i_g(t) \tag{7}$$

Therefore, the current $i(t)$ can be written as:

$$i(t) = i_a(t) + i_r(t) + i_v(t) \tag{8}$$

— Active current

The active current $i_a(t)$ is responsible to carry the active power from the source to the load. It is generally calculated as:

$$i_a(t) = \frac{\langle v(t), i(t)\rangle}{\|v(t)\|^2} v(t) \tag{9}$$

For any given network port, the active current is defined as the minimum current conveying active power P absorbed from the network at that port. It is given by:

$$i_a(t) = \frac{\langle v(t), i(t)\rangle}{\|v(t)\|^2} = \frac{P}{\|v(t)\|^2} v(t) = G_e v(t) \tag{10}$$

In the above equation, G_e is the *equivalent port conductance*.

Figure 1 presents the manner how expression (10) for the active current calculation is implemented.

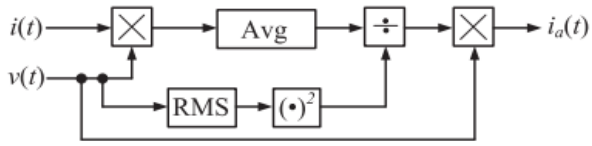

Figure 1. Simulink model for the active current (i_a) calculation.

— Reactive current

The reactive current $i_r(t)$ is responsible to carry reactive energy from a source to a load, or vice–versa.

It is expressed as follows:

$$i_r(t) = \frac{\langle \hat{v}(t), i(t)\rangle}{\|\hat{v}(t)\|^2} \hat{v}(t) \tag{11}$$

As the reactive current i_r is the minimum current conveying reactive power Q absorbed from the network at a given network port, it can be expressed as:

$$i_r(t) = \frac{\langle \hat{v}(t), i(t)\rangle}{\|\hat{v}(t)\|^2} \hat{v}(t) = \frac{Q}{\|\hat{v}(t)\|^2} = B_e \hat{v}(t) \tag{12}$$

In the above equation, B_e is the *equivalent port susceptance*.

Figure 2 illustrates the implementation of expression (12) for the reactive current calculation.

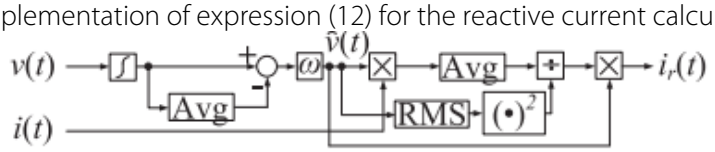

Figure 2. Simulink model for the reactive current (i_r) calculation.

— Void current

The component of the current named void current ($i_v(t)$) carries neither active power nor reactive energy. It is the difference between the total current, the active current and reactive current:

$$i_v(t) = i(t) - i_a(t) - i_r(t) \tag{13}$$

Its calculation is presented in Figure 3.

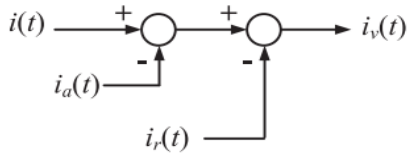

Figure 3. Simulink model for the void current (i_v) calculation.

Thus, the reference current at the SAPF output can be calculated from the load current (i_L) according to the compensation objective. When full compensation is intended, the whole non–active component will be compensated, respectively

$$i_F^*(t) = i_L(t) - i_{La}(t), \tag{14}$$

where i_{La} is the active component of the load current.

However, if only the partial compensation of the harmonic distortion component is desired, the reference current to be compensated is calculated as:

$$i_F^*(t) = i_L(t) - i_{La}(t) - i_{Lr}(t), \tag{15}$$

where i_{Lr} is the reactive component of the load current.

3. IMPLEMENTATION OF THE ACTIVE FILTERING SYSTEM

The conceived Simulink model for the reference current calculation based on CPT is shown in Figure 4. It allows either the total compensation or partial compensation.

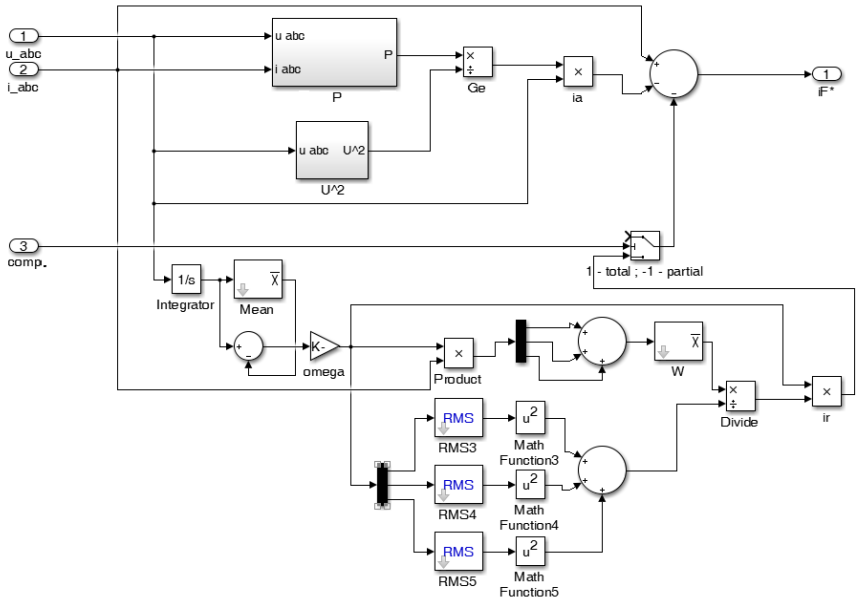

Figure 4. Structure of the block for reference current calculation based on CPT theory.

The Simulink model of the whole active filtering system is illustrated in Figure 5. The nonlinear load is an uncontrolled rectifier with RLC type load and the active power filter is connected to the PCC by an inductive interface filter of 2 mH. On the DC–side of the voltage inverter there is a capacitance of 1100 μF.

The DC–voltage controller is of proportional integral (PI) type and has the following parameters: proportional constant K_{pu}=6.4998; integral time T_{iu}=0.0027s. It ensures that the voltage across the DC–capacitor is kept constant at the prescribed value of 800 V.

The output of the voltage controller is the magnitude of the active component of the reference current which is necessary to cover the losses by maintaining a constant DC–voltage. It is multiplied by an unity magnitude sinusoidal signal in phase with the supply voltage, which is provided by a specific phase–locked loop (PLL) circuit and thus, the first component i_{Fu}^* of the reference compensating current is obtained [8].The second and

main component of the reference compensating current is obtained based on the CPT current decomposition (expression (14) or (15) (Figure 6).

For the current regulation, the hysteresis band control has been taken into consideration, taking into account that its main advantages are simple implementation, fast response and robustness to load variation.

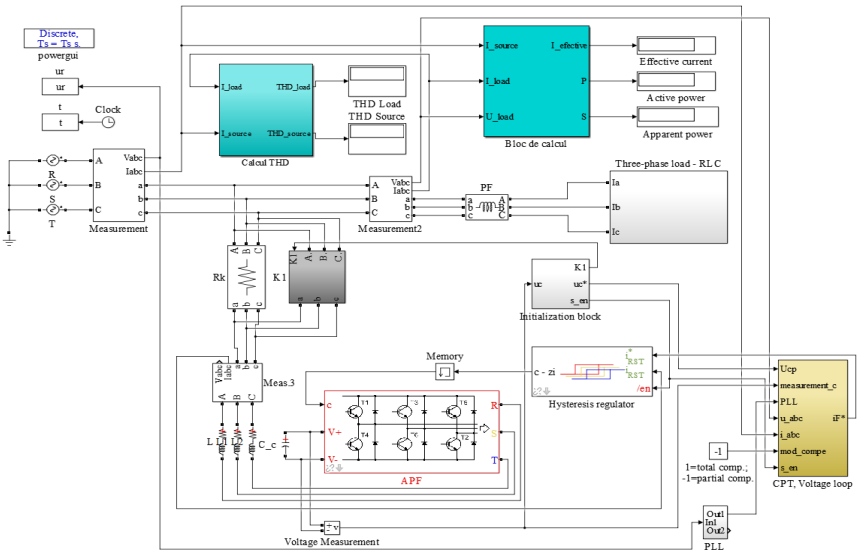

Figure 5. Simulink model of the whole active filtering system.

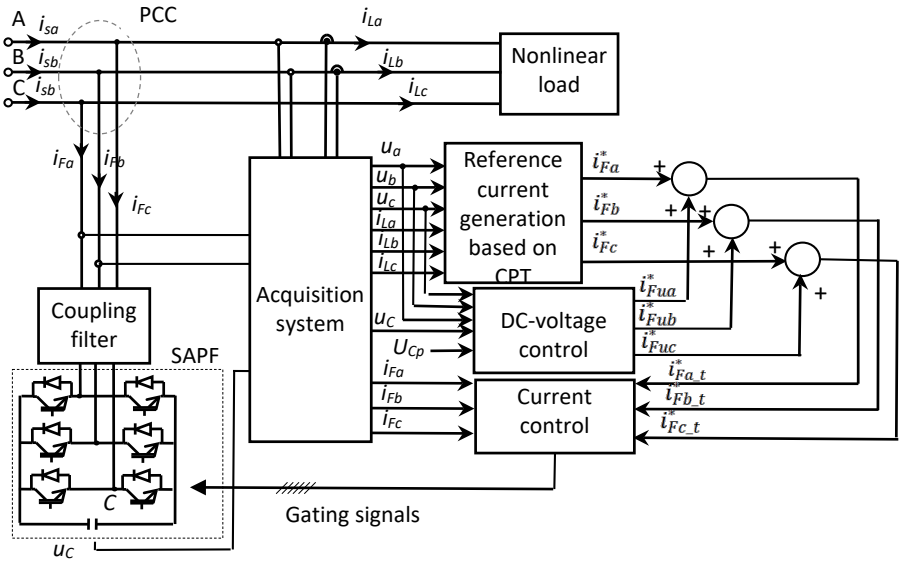

Figure 6. Block diagram of the control system.

4. SIMULATION RESULTS

The waveforms in Figure 7 show the distorted load currents along with the supply voltages. It can be seen that there is a distortion power to be compensated (the harmonic current distortion factor *THD* is 77.07 %) and a reactive power too.

By using the Conservative Power Theory, the three components of the load current are illustrated in Figure 8.

For the case of total compensation of both current harmonic distortion and reactive power, the waveforms in Figure 9 show that the supply currents after compensation are almost sinusoidal (*THD* is 1.94 %) and in phase with the supply voltages, which means that unity power factor is obtained.

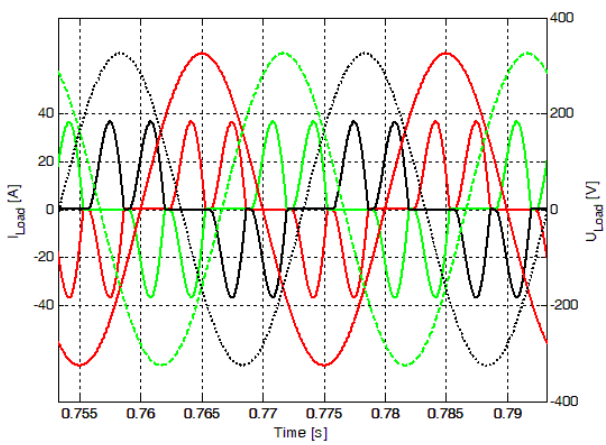

Figure 7. Waveforms of load phase currents and voltages: phase A – in red; phase B – in green; phase C – in black

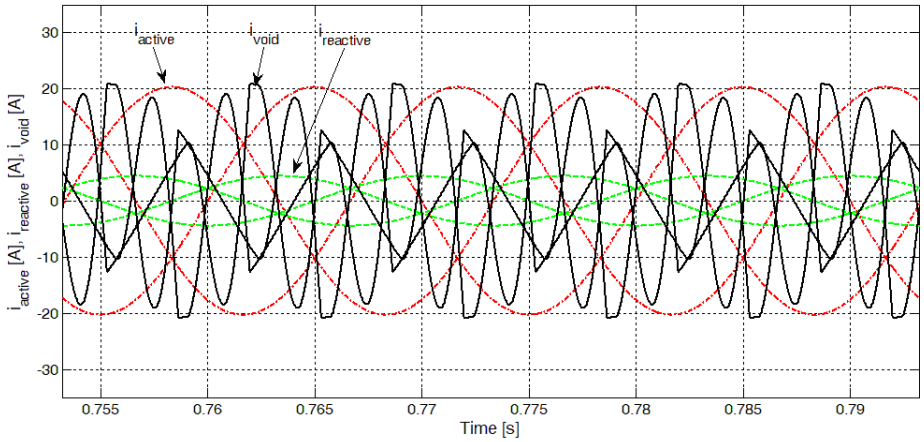

Figure 8. Waveforms of load current components: active current – in red; reactive current – in green; void current – in black.

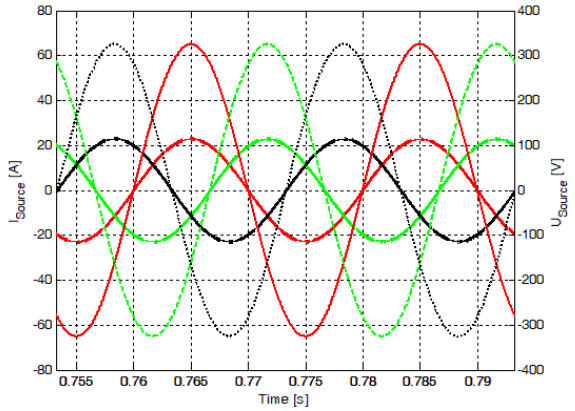

Figure 9. Waveforms of supply phase currents and voltages in the case of total compensation: phase A – in red; phase B – in green; phase C – in black.

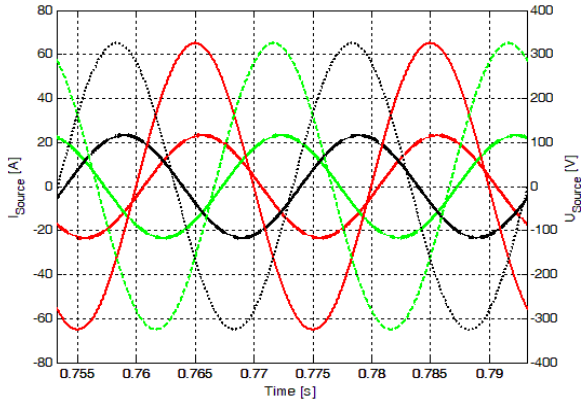

Figure 10. Waveforms of supply phase currents and voltages in the case of partial compensation: phase A – in red; phase B – in green; phase C – in black

When only the current harmonic distortion is compensated, it can be seen that the almost sinusoidal currents lag behind the supply voltages, as the reactive power is not compensated (Figure 10).

5. CONCLUSIONS

The implementation of the Conservative Power Theory in the control of a shunt active power filter leads to good results for the investigated nonlinear load. This theory provides the support based on which the current components are highlighted and the generation of the reference compensating current is accomplished. Thus, the total compensation of both current harmonic distortion and reactive power can be obtained, but also the partial compensation of the current harmonic distortion.

The simulation results prove the correct operation of the shunt active filtering system and good performance.

Acknowledgment

This work was supported by the grant POCU380/6/13/123990, co–financed by the European Social Fund within the Sectorial Operational Program Human Capital 2014 – 2020.

Note: This paper was presented at CNAE 2022 – XXth National Conference of Electric Drives, organized by University POLITEHNICA Timisoara, Faculty of Faculty of Electrotechnics and Electroenergetics (ROMANIA), in Timisoara, ROMANIA, in 12-13 May, 2022.

References

[1] IEEE Std 519–2014: IEEE recommended practice and requirements for harmonic control in electric power systems, 2014.

[2] Kanjiya, P.; Khadkikar, V.; Zeineldin, H.H.: Optimal control of shunt active power filter to meet IEEE Std. 519 current harmonic constraints under nonideal supply condition, IEEE Transactions on Industrial Electronics, vol. 62, no. 2, Feb. 2015, pp. 724–734.

[3] Sharma, A.; Goswami, G.; Goswami, P.K.; Mahajan, R.: A comprehensive review: shunt active power filter for nonlinear IoT applications, 2021 10th International Conference on System Modeling & Advancement in Research Trends (SMART), 2021, pp. 595–600, doi: 10.1109/SMART52563.2021.9676207.

[4] Choudhury, S.; Acharya, D.P.; Nayak, N.: A comprehensive survey on active power filters: classifications, issues and future trends, 2021 International Conference in Advances in Power, Signal, and Information Technology (APSIT), 2021, pp. 1–6, doi: 10.1109/APSIT52773.2021.9641490.

[5] Hafez, W.A.; Sattar, M.A.E.; Alaboudy, A.H.K.; Elbaset, A.A.: Power quality issues of grid connected wind energy system focus on DFIG and various control techniques of active harmonic filter: A review, 2019 21st International Middle East Power Systems Conference (MEPCON), 2019, pp. 1006–1014, doi: 10.1109/MEPCON47431. 2019.9008171.

[6] Bhosale, S.S.; Bhosale, Y.N.; Chavan, U.M.; Malvekar, S.A.: Power quality improvement by using UPQC: A review, 2018 International Conference on Control, Power, Communication and Computing Technologies (ICCPCCT), 2018, pp. 375–380, doi: 10.1109/ICCPCCT.2018.8574264.
[7] Chang, G.W.; Shee, T.C.: A reference compensating current strategy for shunt active power filter control, IEEE Trans. Power Delivery, vol. 19, no. 4, Oct. 2004, pp. 1751–1758.
[8] Bitoleanu, A.; Popescu, M.; Suru, C.V.: Filtre active de putere. Fundamente și aplicații. Ed. Matrix, București, 2021.
[9] Chhandak, R.K.; Agrawal, S.; Palwalia, D.K.: Comparative study of two control technique for shunt active power filter using PID controller, 2017 International Conference on Current Trends in Computer, Electrical, Electronics and Communication (CTCEEC), 2017, pp. 683–687, doi: 10.1109/CTCEEC.2017.8455106.
[10] Bitoleanu, A.; Popescu, M.; Dobriceanu, M.: About reference currents calculation of active power filters using instantaneous power, Acta Electrotehnica, vol. 44, No. 3, 2004, pp. 111–116.
[11] Wei, X.; Zhao, K.; Shuang, K.: Current control strategy research for active power filter, IEEE EUROCON, 2009, pp. 1513–1520, doi: 10.1109/EURCON.2009.5167841.
[12] Han, Y.; Khan, M.M.; Xu, L.; Zhou, L.; Yao, C.; Chen, C.: A novel control strategy for active power filter using synchronous reference frame (SRF) ADALINEs, International Review of Electrical Engineering, vol. 3, no. 4, August 2008, pp. 629–645.
[13] Tenti, P.; Mattavelli, P.: A time–domain approach to power term definitions under non–sinusoidal conditions, 6th Int. Workshop on Power Definitions and Measur. under Non–Sinusoidal Conditions, Milano, October 13–15, 2003.
[14] Tenti, P.; Mattavelli, P.; Tedeschi, E.: Compensation techniques based on reactive power conservation, Electrical Power Quality and Utilisation, Journal Vol. XIII, No. 1, 2007.
[15] Tenti, P.: Conservative Power Theory – A theoretical background to understand energy issues of electrical networks under non–sinusoidal conditions and to approach measurement, accountability and control problems in smart grids, UNICAMP – UNESP Sorocaba, Aug. 2012.
[16] Pătrașcu, A.; Popescu, M.; Suru, V.: The Conservative Power Theory and the active filtering. Bulletin AGIR No. 4/2012, pp. 179–182.
[17] Suru, V.; Pătrașcu, A.; Popescu, M.; Bitoleanu, A.: Conservative Power Theory application in shunt active power filtering under asymmetric voltage. Proc. 14th International Conference on Optimization of Electrical and Electronic Equipment (OPTIM), 2014, pp. 647–654.
[18] Preda, A.; Popescu, M.; Linca, M.: Conservative Power Theory (CPT) method applied in the indirect current control for active D.C. traction substations, Athens: ATINER'S Conference Paper Series, No: TRA2015–1561, Aug. 2015, pp. 1–17.
[19] Morales Paredes, H.K.; Costabeber, A.; Tenti, P.: Application of Conservative Power Theory to cooperative control of distributed compensators in smart grids, Przegląd Elektrotechniczny (Electrical Review), R. 87, no. 1, 2011.

ISSN 1584 – 2665 (printed version); ISSN 2601 – 2332 (online); ISSN–L 1584 – 2665
copyright © University POLITEHNICA Timisoara, Faculty of Engineering Hunedoara,
5, Revolutiei, 331128, Hunedoara, ROMANIA
http://annals.fih.upt.ro